ORTAL
YOUR LIFE. YOUR FIRE

170H Tunnel Screen

Manufacturer Update – Fireplace Legs Modification
Manufacturer Effective Date: March 20th 2018
Serial Number Forward #15275

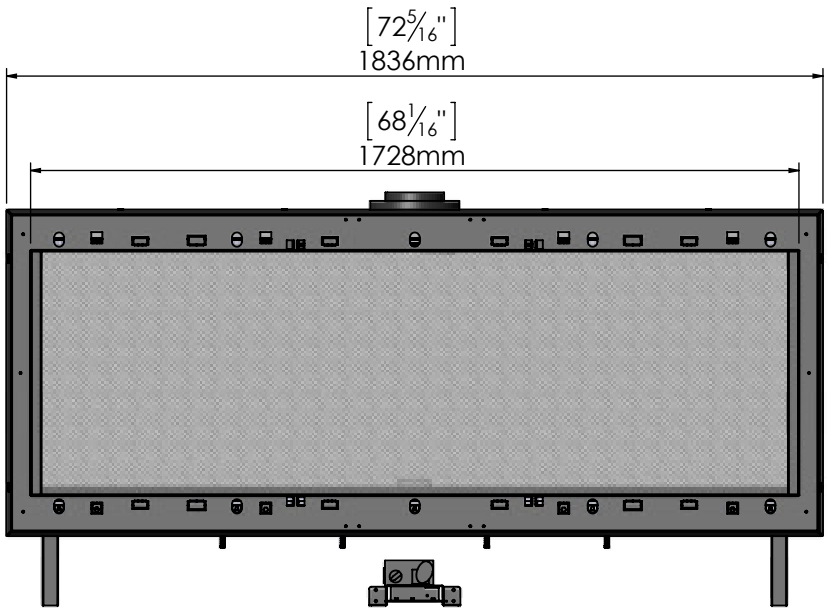

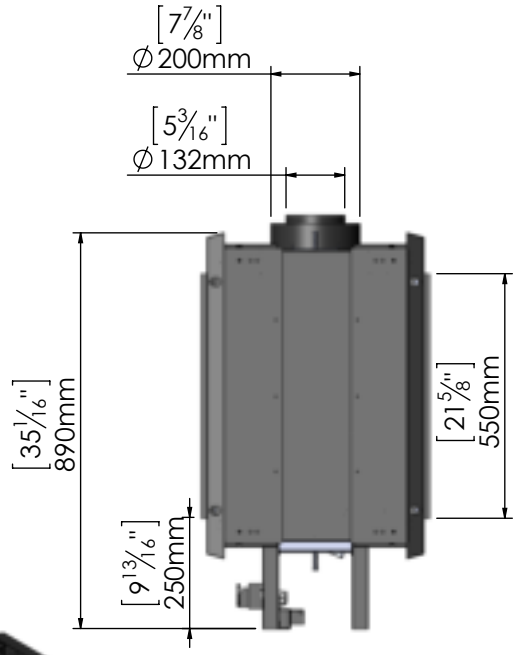

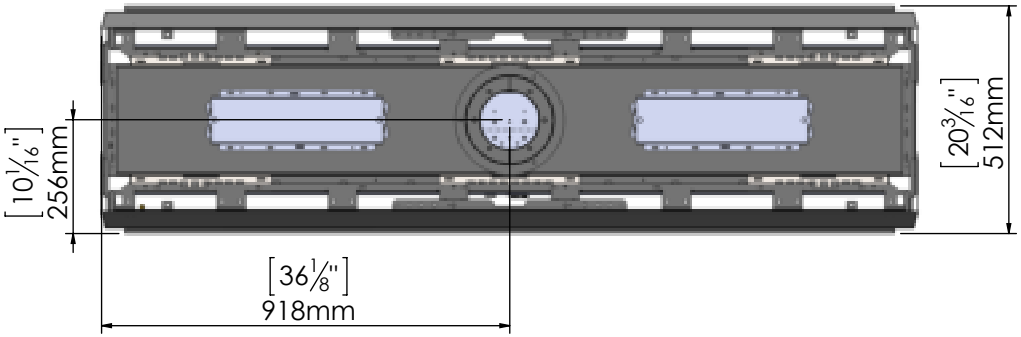



15/05/2018